Freedom SW Inverter/Charger Parallel Stacking Configuration

120 VAC only

CAUTION

DO NOT USE **INPUT L2** AND **OUTPUT L2** IN STACKING CONFIGURATIONS.

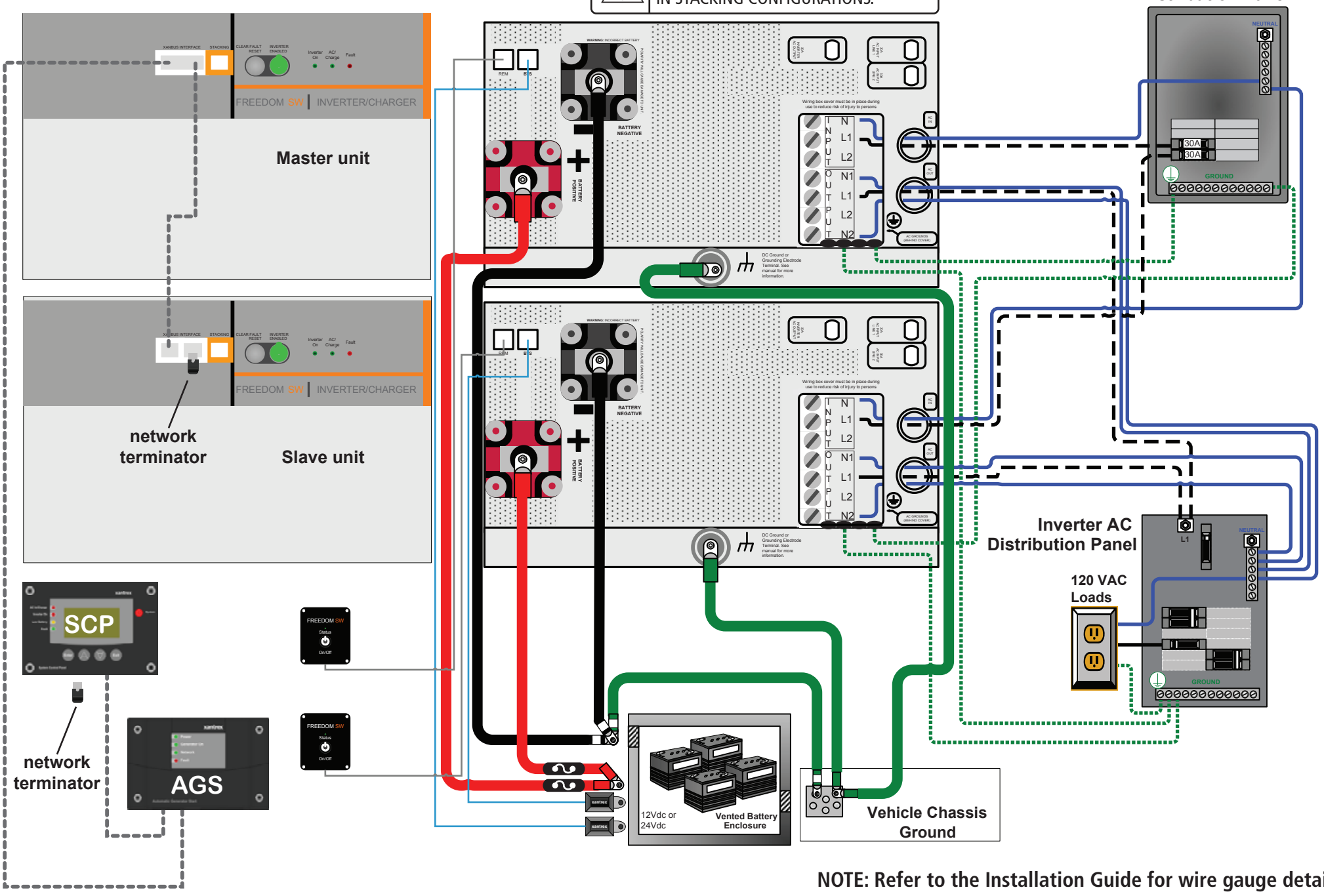

NOTE: Refer to the Installation Guide for wire gauge details.

Freedom SW Inverter/Charger Series Stacking Configuration

120 and 240 VAC

CAUTION

DO NOT USE **INPUT L2** AND **OUTPUT L2** IN STACKING CONFIGURATIONS.

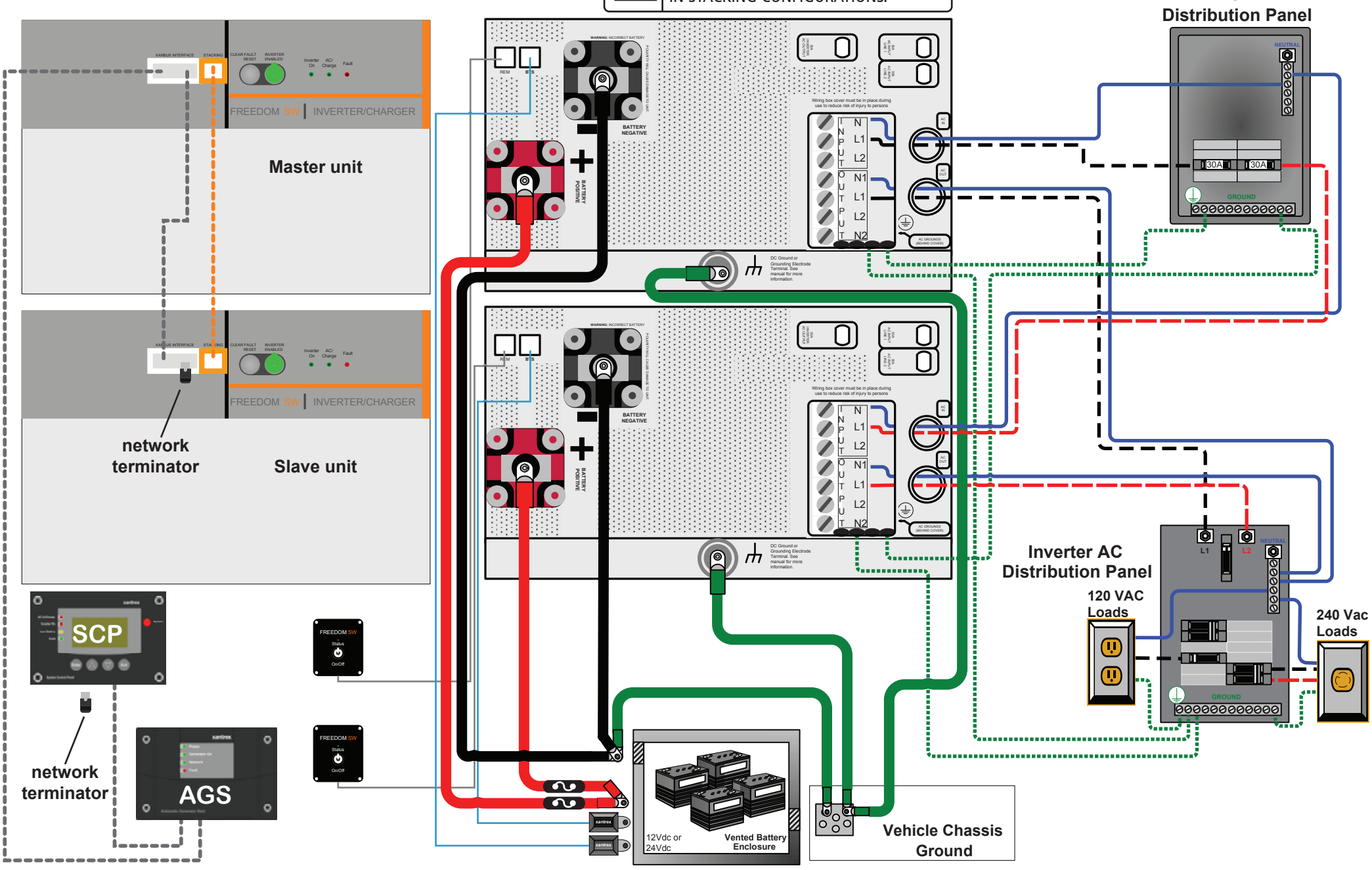

NOTE: Refer to the Installation Guide for wire gauge details.