Conext™ SW DC Switchgear (865-1016)

Installation Guide

Important Safety Instructions

READ AND SAVE THESE INSTRUCTIONS - DO NOT DISCARD

⚠DANGER

ELECTRIC SHOCK, EXPLOSION, AND ARC FLASH HAZARDS

All wiring must be done by qualified personnel to ensure compliance with all applicable installation codes and regulations.

Disconnect and lockout all DC and AC sources that are powering this equipment and any connected equipment before installing, servicing, and performing any upgrades.

Always wear proper personal protective equipment (PPE) before working on or inside this equipment.

Always use a properly rated voltage sensing device to check the presence of potential and residual energy.

Do not route and mix DC cables and wires with AC cables and wires within the same compartment. This equipment is equipped with a partition (item E) that isolates DC wiring from other wiring.

Failure to follow these instructions will result in death or serious injury.

NOTICE

EQUIPMENT DAMAGE

Do not use this product with another inverter/charger device. The DC Switchgear is custom-designed to work with the Conext SW inverter/charger only.

Failure to follow these instructions can cause equipment damage.

Materials List

The Conext SW DC Switchgear (865-1016) ships with the following items:

- **1x** Installation Guide
- **1x** Switchgear Box
- **1x** Switchgear Cover
- **1x** 250-amp DC Breaker (pre-installed)
- **1x** Positive copper bus bar (pre-installed)
- **1x** Negative copper bus bar (pre-installed)

Installation

1. **Choose a location to mount the DC switchgear.** The DC switchgear can only be positioned directly to the left of the Conext SW inverter/charger. See an illustration on the back page.
2. **Remove the DC switchgear cover** to expose the mounting key holes.
3. **Mount the DC switchgear.** With a Conext SW inverter/charger already installed, the DC switchgear can be hung on the mounting brackets that extend from the inverter/charger (see back page for an illustration).
4. **Make the proper wiring connections.** Use only qualified personnel to ensure compliance with all applicable installation and electrical codes and regulations.
5. **Mount the System Control Panel (SCP)** on the DC switchgear cover (item O), if applicable. Remove the blanking plate first before installing the SCP.
6. **Replace the DC switchgear cover.** Secure the cover using the same screws that came with the product.

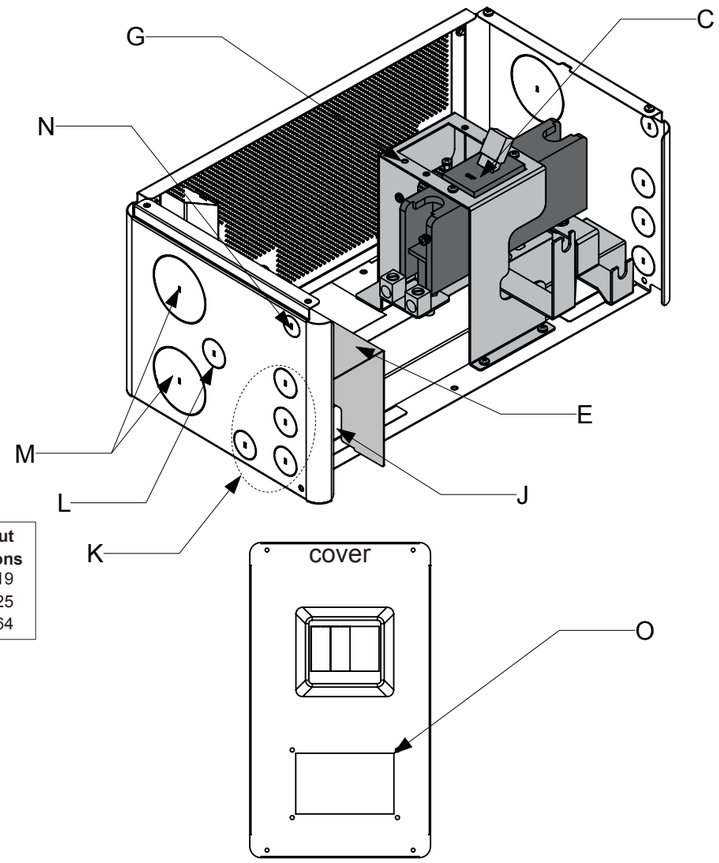

Knockout Dimensions	
3/4"	M19
1"	M25
2.5"	M64

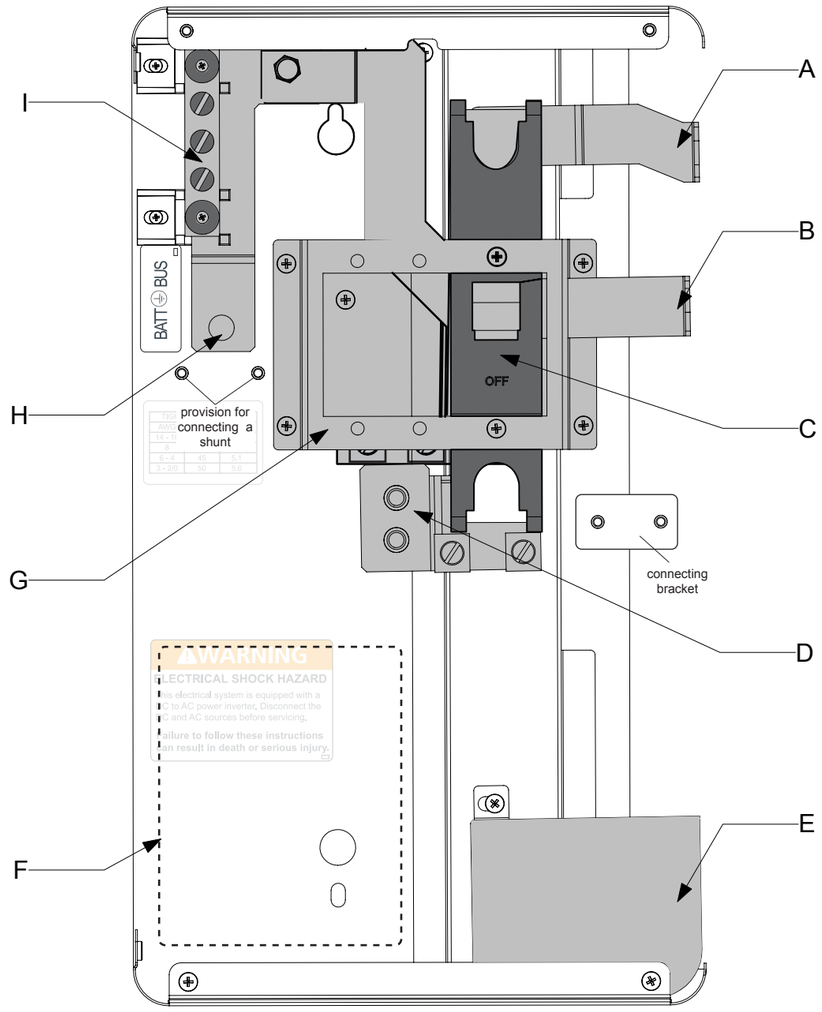

A	BATTERY POSITIVE (+) BUS BAR. Connect to the inverter's Battery Positive terminal.
B	BATTERY NEGATIVE (–) BUS BAR. Connect to the inverter's Battery Negative terminal.
C	BATTERY DC BREAKER. Attached to the BATTERY POSITIVE (+) BUS BAR. Provides primary disconnect from battery current.
D	DC POSITIVE (+) BUS TERMINAL. Connect only DC positive (+) cables to the bus terminals. Use proper torque (values posted inside unit) to secure the wire. Bolts are provided.
E	Wiring barrier. Isolates DC and AC wiring from each other.
F	DC wire compartment. Use this compartment to route DC cables and wires through.
G	Mounting bracket for DC breakers. Provision for two additional DC breakers.
H	DC NEGATIVE (–) BUS TERMINAL. Connect only DC negative (–) cables to the bus terminals. Use proper torque (values posted inside unit) to secure the wire. Bolts are provided.
I	Ground/Earth BATT ⏚ BUS bar. Attach other ground/earth wires to a vacant terminal. Use proper torque (values posted inside unit) to secure the wire.
J	AC wiring compartment. Use this compartment to route AC cables and wires.
K	AC knockouts (top and bottom). Remove to pass AC cables and wires through.
L	Knockouts (top and bottom) for BTS.
M	DC knockouts (top and bottom). Remove to pass DC cables and wires through.
N	Knockouts (top and bottom) for network cables.
O	SCP panel cutout with blanking plate. Use to mount the SCP.

SE PN	Approved DC Breakers
865-1070	BREAKER 80A 125VDC PANEL MOUNT
865-1075	BREAKER 60A 160VDC PANEL MOUNT
865-1080	BREAKER 100A 125VDC PANEL MOUNT

Over-current protection (a DC breaker) must be installed to protect a DC source (like a solar charge controller) from short circuits and to provide a means of disconnecting the DC source. Consult local electrical codes to establish the correct fuse or circuit breaker rating.

Copyright © 2012 Schneider Electric. All Rights Reserved. All trademarks are owned by Schneider Electric Industries SAS or its affiliated companies.

TOOLS NEEDED

1x power drill
1x screw driver set (phillips and flathead)
4x #10 (M5) machine screws

Mounting the DC switchgear on the mounting bracket of the inverter/charger

1. Prepare four #10 (M5) machine screws. Use two screws to secure the DC Switchgear to the installation brackets of the Conext SW and two screws to secure the connecting bracket. The connecting bracket attaches to the Conext SW and DC Switchgear.
2. Remove the nuts and washers from the inverter/charger's DC terminals, if present.
3. Position the DC Switchgear next to the inverter/charger carefully aligning the mounting holes with the pre-cut mounting holes on the installation bracket and the copper bus bar connectors with the inverter/charger's DC terminals.
4. Fasten the screws to the mounting holes on the DC Switchgear with the pre-cut mounting holes on the installation bracket of the inverter/charger.
5. Fasten the screws to the connecting bracket to join the DC Switchgear and the Conext SW together.
6. Fasten the nuts and washers of the inverter/charger's DC terminal bolts to secure the copper bus bars.

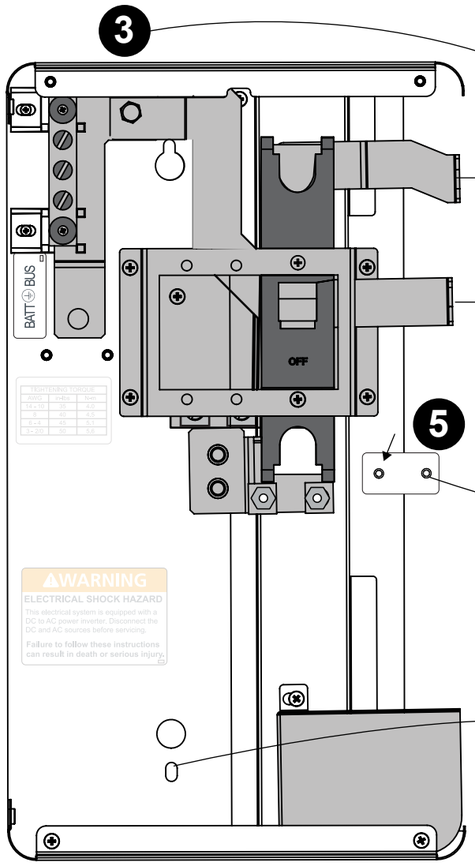

Conext SW DC Switchgear
(865-1016)

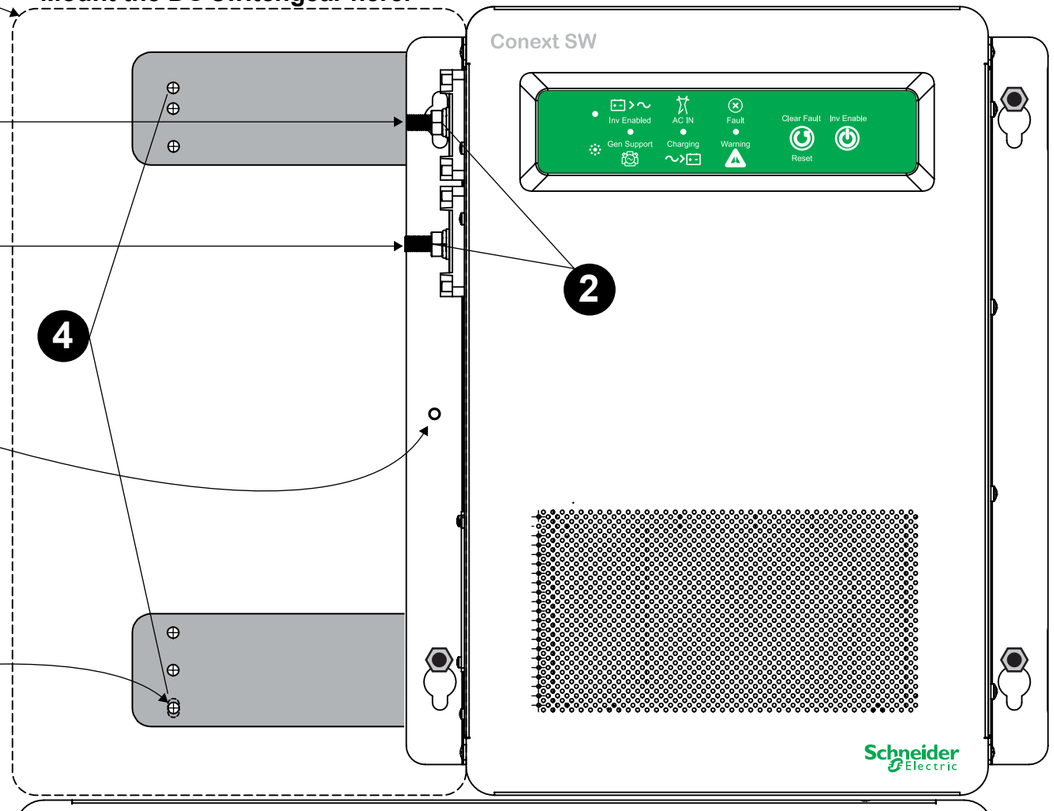

Conext SW Inverter/Charger
(865-2524*, 865-2524-61*,
865-4024**, 865-4024-61**)

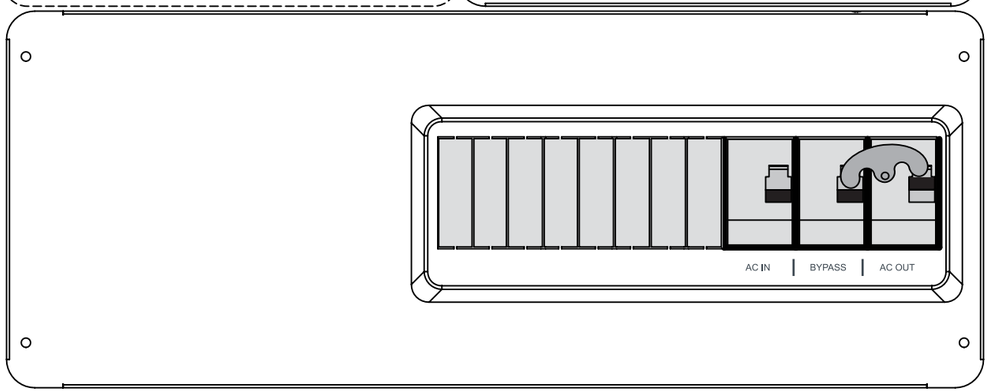

Conext SW AC Switchgear
(865-1017*,
865-1017-61**)
To order, contact a
sales representative.

Illustration only

* for 120/240V systems
** for 230V systems (not shown)

Contact Information
www.schneider-electric.com
Please contact your local Schneider Electric Sales Representative or visit the Schneider Electric website at:
http://www.schneider-electric.com/sites/corporate/en/support/operations/local-operations/local-operations.page

Exclusion for Documentation
UNLESS SPECIFICALLY AGREED TO IN WRITING, SELLER
(A) MAKES NO WARRANTY AS TO THE ACCURACY, SUFFICIENCY OR SUITABILITY OF ANY TECHNICAL OR OTHER INFORMATION PROVIDED IN ITS MANUALS OR OTHER DOCUMENTATION;
(B) ASSUMES NO RESPONSIBILITY OR LIABILITY FOR LOSSES, DAMAGES, COSTS OR EXPENSES, WHETHER SPECIAL, DIRECT, INDIRECT, CONSEQUENTIAL OR INCIDENTAL, WHICH MIGHT ARISE OUT OF THE USE OF SUCH INFORMATION. THE USE OF ANY SUCH INFORMATION WILL BE ENTIRELY AT THE USER'S RISK; AND
(C) REMINDS YOU THAT IF THIS MANUAL IS IN ANY LANGUAGE OTHER THAN ENGLISH, ALTHOUGH STEPS HAVE BEEN TAKEN TO MAINTAIN THE ACCURACY OF THE TRANSLATION, THE ACCURACY CANNOT BE GUARANTEED. APPROVED CONTENT IS CONTAINED WITH THE ENGLISH LANGUAGE VERSION WHICH IS POSTED AT WWW.SCHNEIDER-ELECTRIC.COM.

975-0678-01-01 Rev B Printed in China

Copyright © 2012 Schneider Electric. All Rights Reserved. All trademarks are owned by Schneider Electric Industries SAS or its affiliated companies.